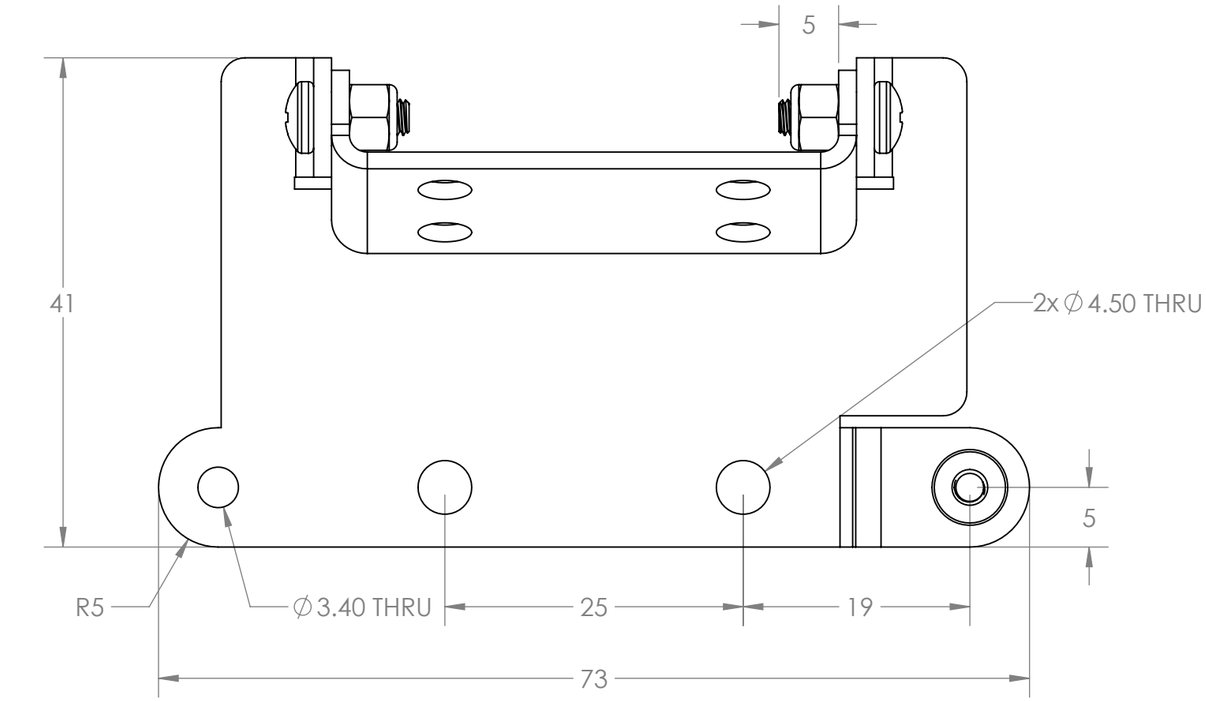

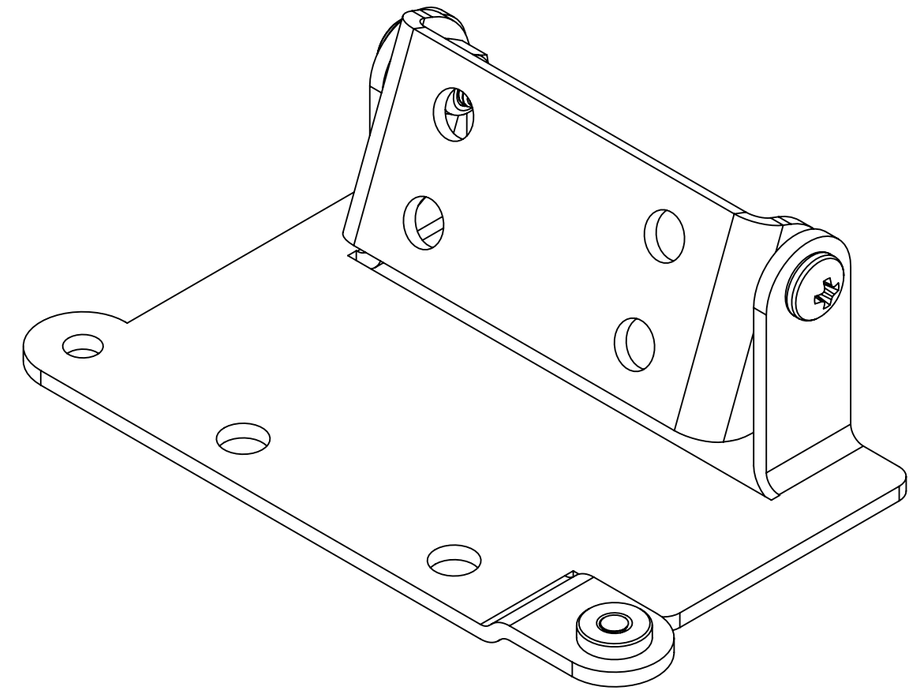

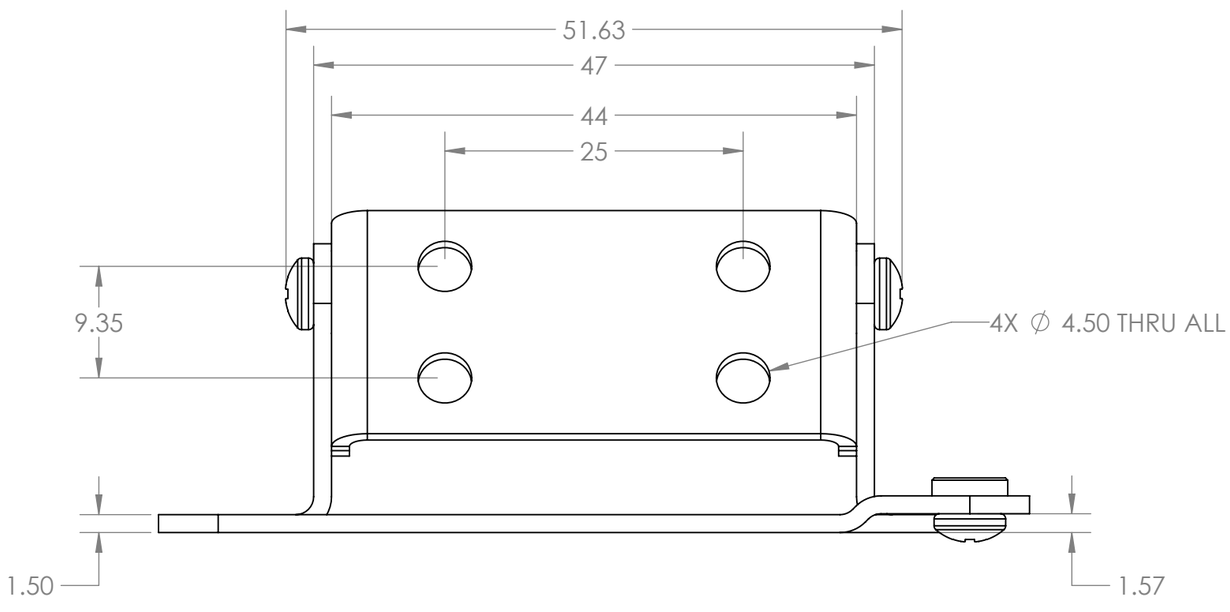

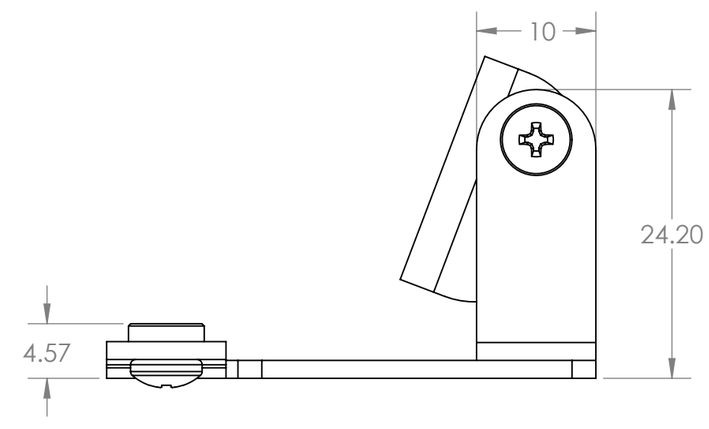

PROPRIETARY AND CONFIDENTIAL

THE INFORMATION CONTAINED IN THIS DRAWING IS THE SOLE PROPERTY OF SmartVisionLights. ANY REPRODUCTION IN PART OR AS A WHOLE WITHOUT THE WRITTEN PERMISSION OF SmartVisionLights IS PROHIBITED.

UNLESS OTHERWISE SPECIFIED:

DIMENSIONS ARE IN MM
TOLERANCES:
FRACTIONAL ±
ANGULAR: BEND ±
TWO PLACE DECIMAL ±
THREE PLACE DECIMAL ±

INTERPRET GEOMETRIC TOLERANCING PER:

MATERIAL

FINISH Matte Black Powdercoat

DO NOT SCALE DRAWING

	NAME	DATE
DRAWN	NC	5/3/2018
CHECKED	MP	5/3/2018
ENG APPR.	MP	5/3/2018
MFG APPR.	MP	5/3/2018
Q.A.		

COMMENTS:

UNITS ARE IN MILLIMETERS

smart vision lights

SVL PART NO.

BKT0025

SIZE	ENG. DWG. NO.	REV
B	LM45-Mounting Bracket	3

SCALE: 2:1 WEIGHT: SHEET 1 OF 1